GL6N10A4

GL Silicon N-Channel Power MOSFET

V_{DSS}	100	V
I_D	6	A
P_D	3	W
$R_{DS(ON)type}$	110	mΩ

General Description：

The GL6N40A4 uses advanced trench technology and design to provide excellent RDS(ON) with low gate charge. It can be used in a wide variety of applications.

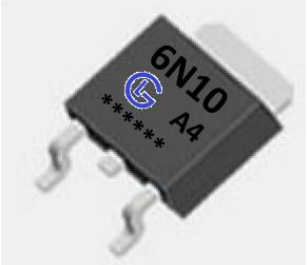

Features：

- VDS = 100V,ID = 6A RDS(ON) < 140mΩ @ VGS=10V (Typ:110mΩ)
- High density cell design for ultra low Rdson
- Fully characterized avalanche voltage and current
- Excellent package for good heat dissipation

Inner Equivalent Principium Chart

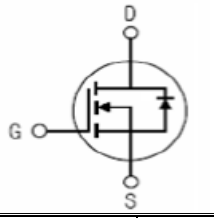

Applications：

Power switching application
Hard switched and high frequency circuits
Uninterruptible power supply

Absolute（Tc= 25℃ unless otherwise specified）：

Symbol	Parameter	Rating	Units
V_{DSS}	Drain-to-Source Voltage	100	V
I_D	Continuous Drain Current	6	A
	Continuous Drain Current T_C=100 °C	3	A
I_{DM}	Pulsed Drain Current	24	A
V_{GS}	Gate-to-Source Voltage	±20	V
P_D	Power Dissipation	3	W
T_J， T_{stg}	Operating Junction and Storage Temperature Range	–55 to 175	℃

Electrical Characteristics（Tc= 25℃ unless otherwise specified）:

OFF Characteristics						
Symbol	Parameter	Test Conditions	Rating			Units
			Min.	Typ.	Max.	
V_{DSS}	Drain to Source Breakdown Voltage	V_{GS}=0V, I_D=250μA	100	110	--	V
I_{DSS}	Drain to Source Leakage Current	V_{DS}=100V, V_{GS}=0V, T_a=25℃	--	--	1	μA
$I_{GSS(F)}$	Gate to Source Forward Leakage	V_{GS}=+20V	--	--	1	μA
$I_{GSS(R)}$	Gate to Source Reverse Leakage	V_{GS}=-20V	--	--	-1	μA

ON Characteristics						
Symbol	Parameter	Test Conditions	Rating			Units
			Min.	Typ.	Max.	
$R_{DS(ON)}$	Drain-to-Source On-Resistance	V_{GS}=10V,I_D=5A	--	110	140	mΩ
$V_{GS(TH)}$	Gate Threshold Voltage	V_{DS}=V_{GS}, I_D=250μA	1.2	1.8	2.5	V
Pulse width tp≤380μs, δ ≤2%						

Dynamic Characteristics						
Symbol	Parameter	Test Conditions	Rating			Units
			Min.	Typ.	Max.	
g_{fs}	Forward Transconductance	V_{DS}=5V, I_D=2.9A	--	8	--	S
C_{iss}	Input Capacitance	V_{GS}=0V V_{DS}=25V f = 1.0MHz	--	690	--	pF
C_{oss}	Output Capacitance		--	120	--	
C_{rss}	Reverse Transfer Capacitance		--	90	--	

Resistive Switching Characteristics						
Symbol	Parameter	Test Conditions	Rating			Units
			Min.	Typ.	Max.	
$t_{d(ON)}$	Turn-on Delay Time	I_D =2A V_{DD}=30V V_{GS}=10V R_G=2.5Ω	--	11	--	ns
tr	Rise Time		--	7.4	--	
$t_{d(OFF)}$	Turn-Off Delay Time		--	35	--	
t_f	Fall Time		--	9.1	--	
Q_g	Total Gate Charge	I_D =3A V_{DD} =30V V_{GS}=10V	--	15.5	--	nC
Q_{gs}	Gate to Source Charge		--	3.2	--	
Q_{gd}	Gate to Drain (“Miller”)Charge		--	4.7	--	

Source-Drain Diode Characteristics						
Symbol	Parameter	Test Conditions	Rating			Units
			Min.	Typ.	Max.	
I_S	Continuous Source Current (Body Diode)		--	--	6	A
V_{SD}	Diode Forward Voltage	I_S=6A,V_{GS}=0V	--	--	1.2	V
Pulse width tp≤380μs, δ ≤2%						

Symbol	Parameter	Typ.	Units
$R_{\theta JA}$	Junction-to-Ambient	41.7	℃/W

[a1]: Repetitive rating; pulse width limited by maximum junction temperature

[a2]: EAS condition : Tj=25℃,VDD=40V,VG=10V,L=0.5mH,Rg=25Ω

[a3]: I_{SD} =6A,di/dt ≤100A/us,V_{DD}≤BV_{DS}, Start T_J=25℃

Test Circuit

E_{AS} test circuit

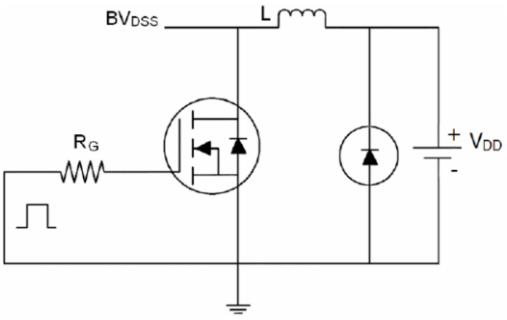

Gate charge test circuit

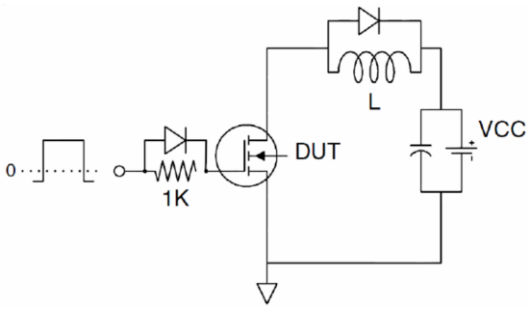

Switch Time Test Circuit

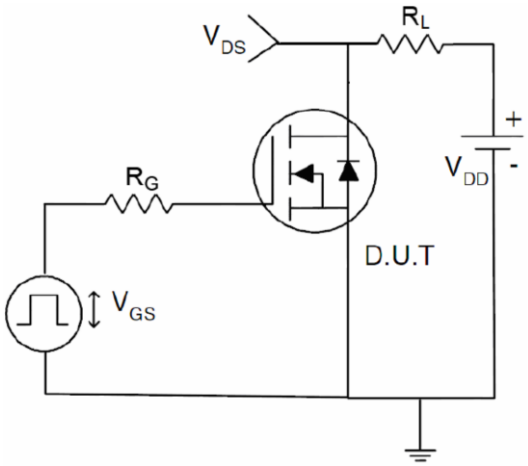

Typical Electrical and Thermal Characteristics (curves)

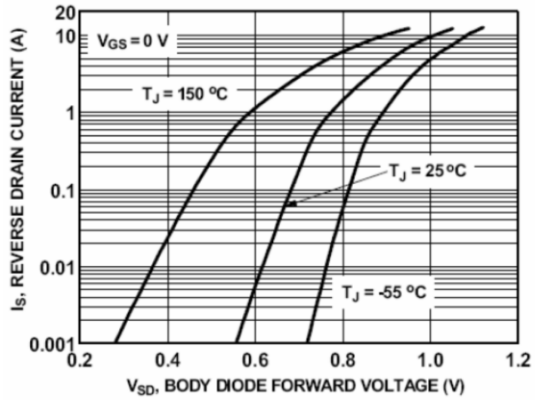

Figure1. Source-Drain Diode Forward Voltage

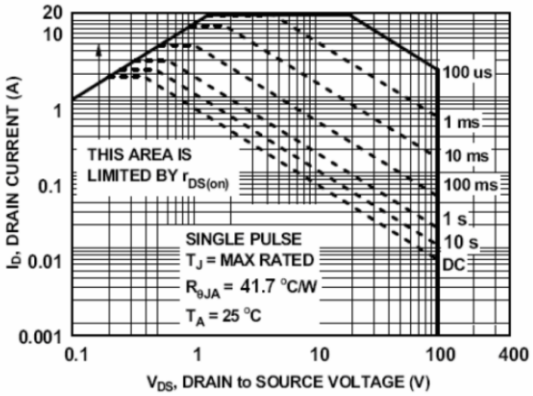

Figure2. Safe operating area

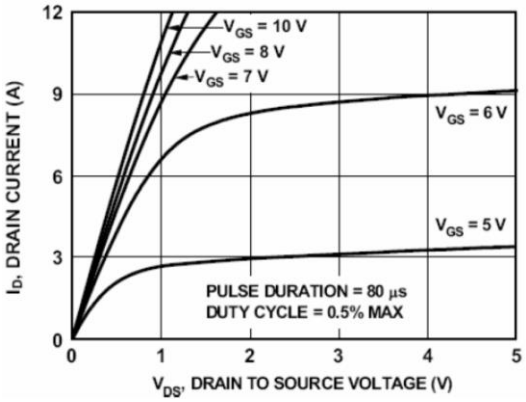

Figure3. Output characteristics

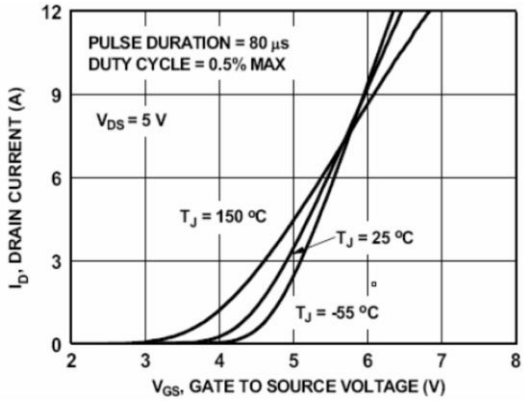

Figure4. Transfer characteristics

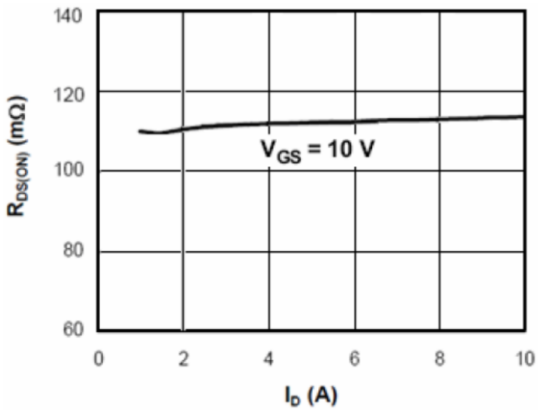

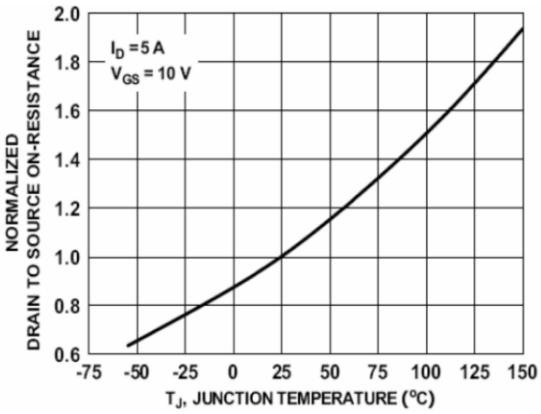

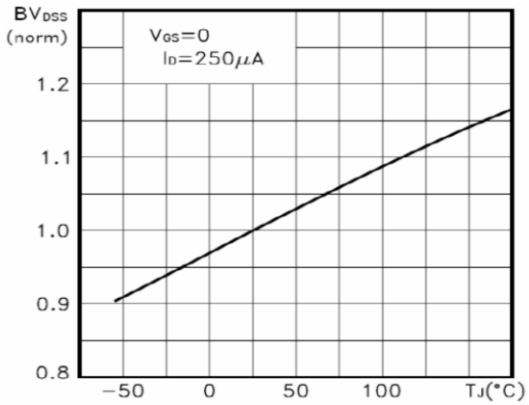

Figure7. BVDSS vs Junction Temperature

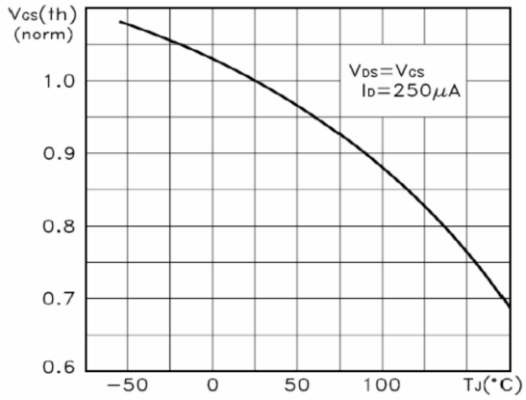

Figure8. VGS(th) vs Junction Temperature

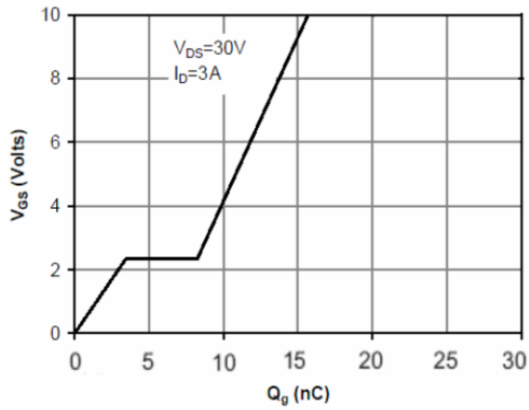

Figure9. Gate charge waveforms

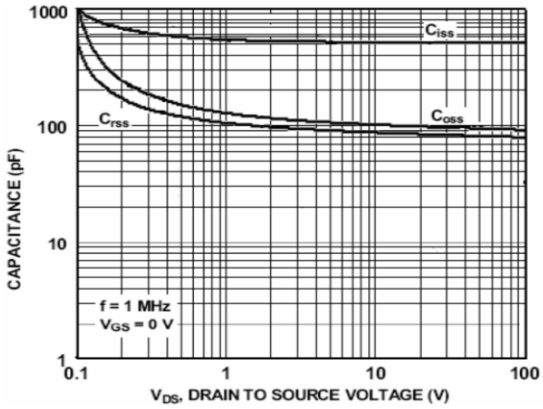

Figure10. Capacitance

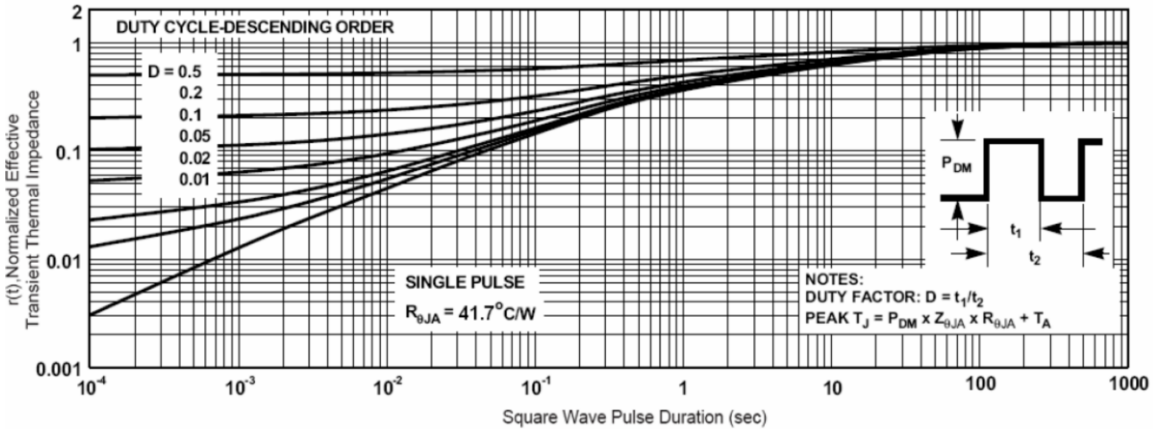

Figure11. Normalized Maximum Transient Thermal Impedance

Company: Wuxi Guang Lei electronic technology co., LTD
TEL: 13961734102 Mr.yuan